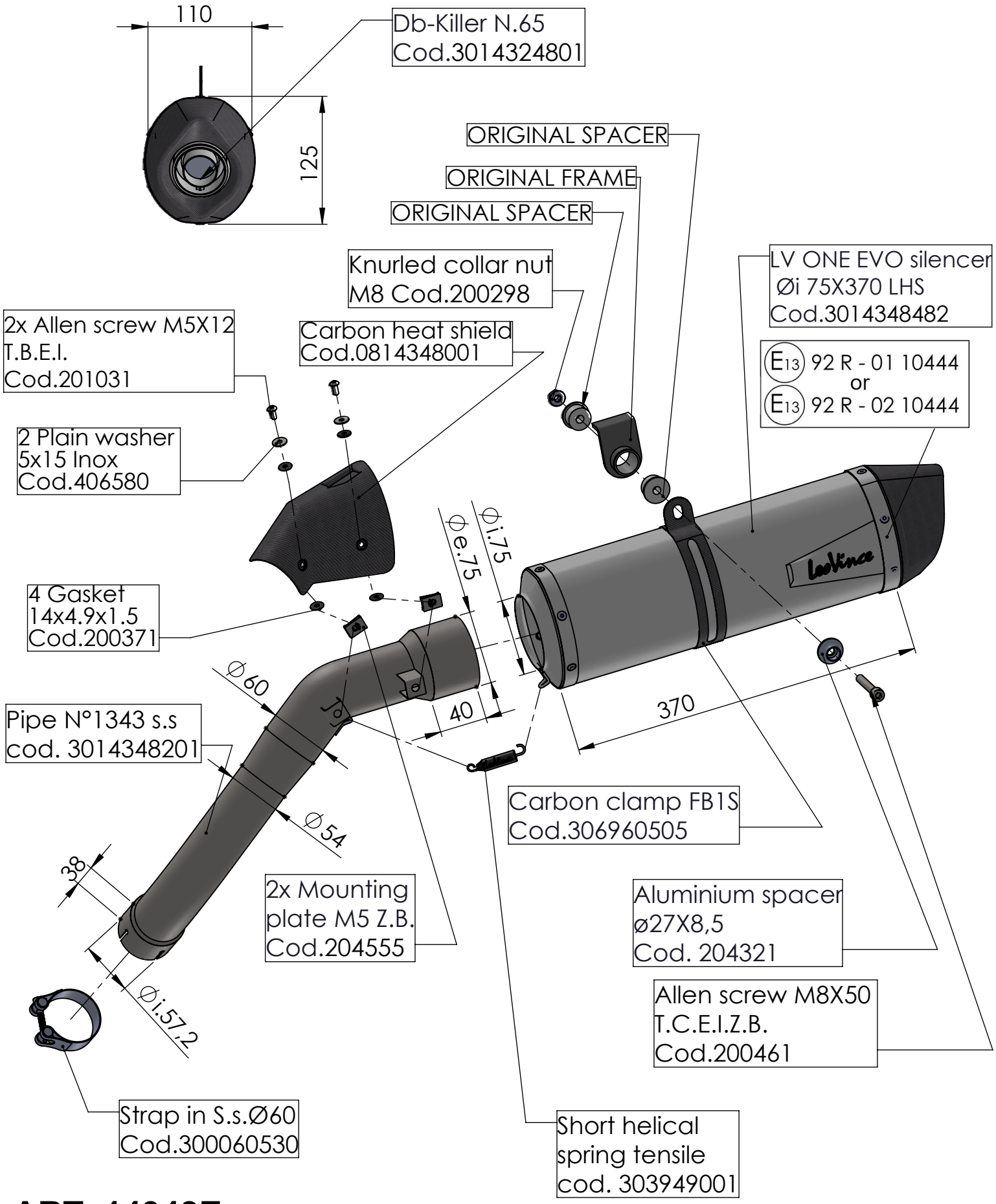

ART. 14348E

MOTO GUZZI V85 TT (also fits 35kW version)
(Fits with original panniers and original centre stand)

SLIP-ON - LV ONE EVO - STAINLESS STEEL - APPROVED