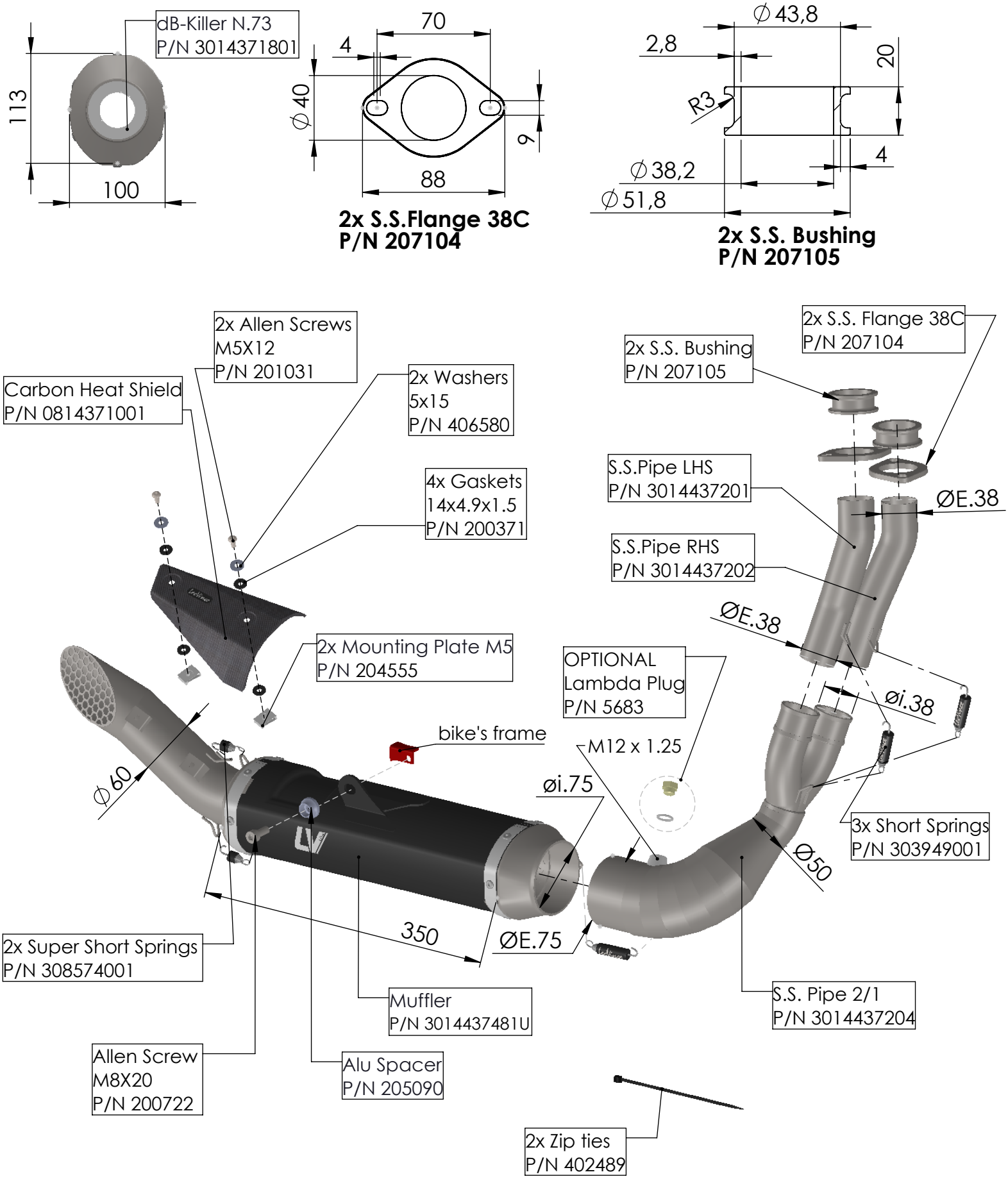

ART. 14437EBU

HONDA CB 750 HORNET (also fits 35kW version)

FULL SYSTEM - LV RACE - STAINLESS STEEL