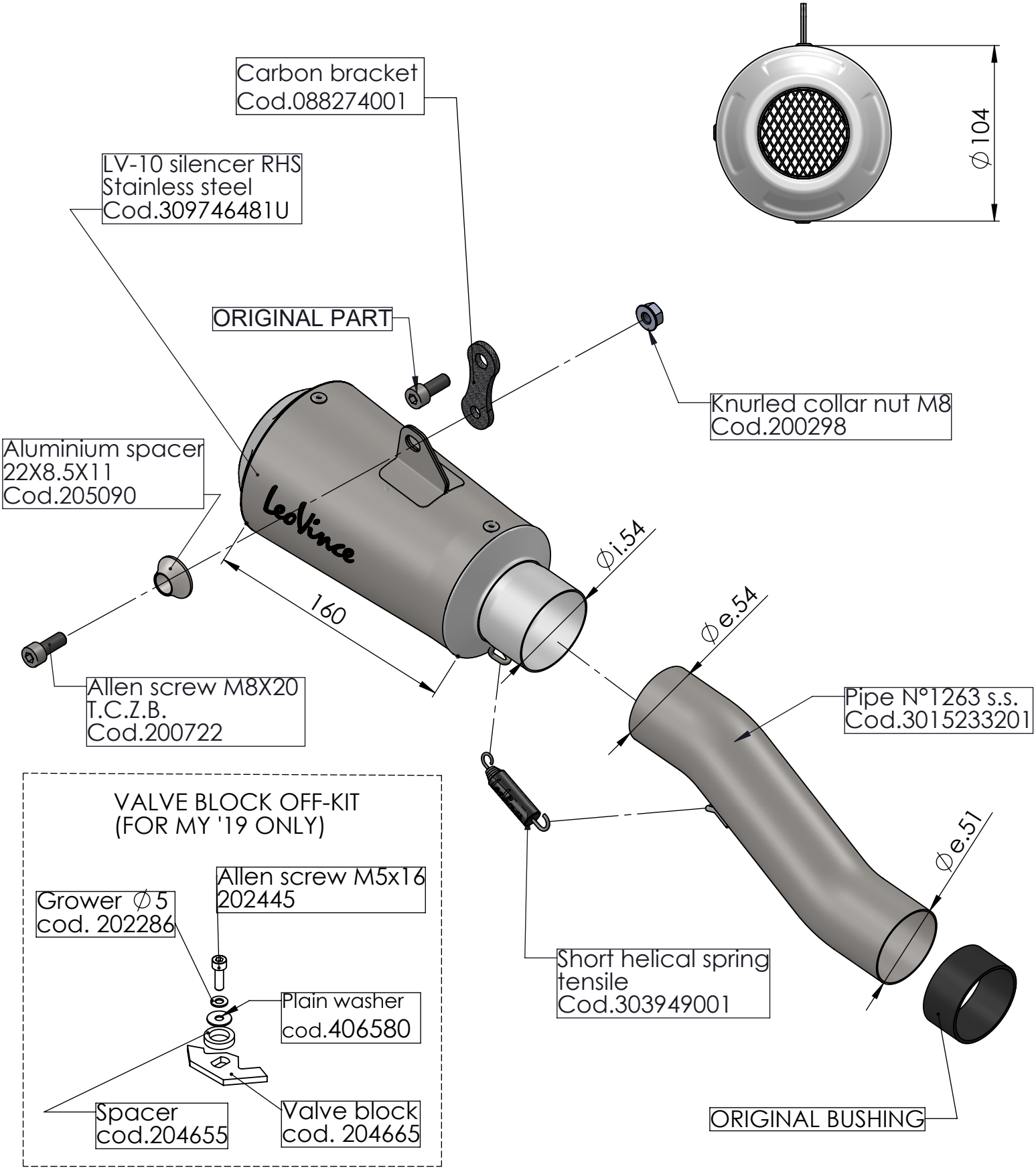

ART. 15233U

KAWASAKI ZX-6R-NINJA

SLIP-ON - LV-10 - STAINLESS STEEL